Two-Stage Operational Amplifier Design

Ngo Chi Thanh
University of Transport and Communications

1. Introduction:

This report summarizes the pre-layout design and simulation of a two-stage CMOS op-amp in 90nm using Cadence Virtuoso. The design achieves 62.9 dB DC gain, 25.1 MHz GBW, and 77° phase margin with 1 pF load. Monte Carlo (200 runs) is used to assess robustness.

2. Schematic and testbench:

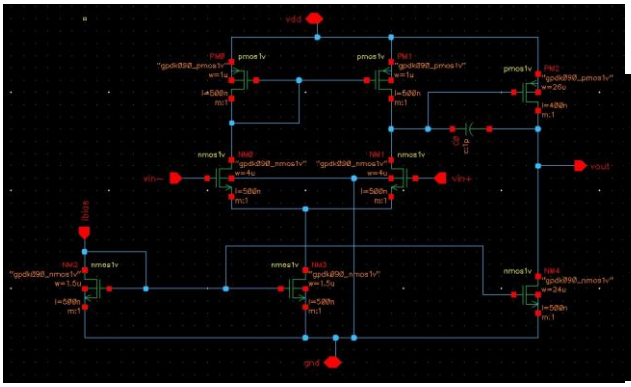

Fig. 1. Schematic of the two-stage CMOS op-amp

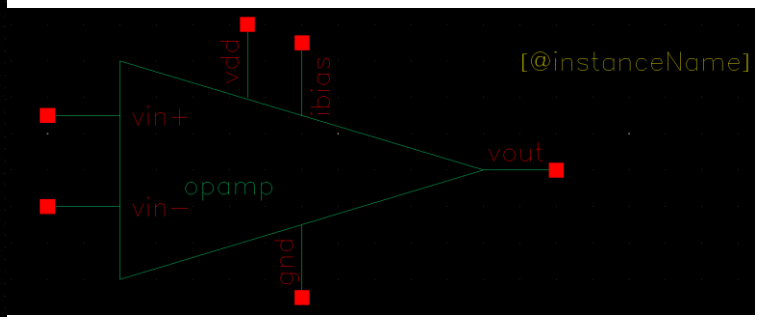

Fig. 2. Testbench

The amplifier uses an NMOS differential input pair, a PMOS current-mirror load, an NMOS bias branch, and a second gain stage. The output is compensated with a capacitor and evaluated under a 1 pF load.

3. Device sizing:

Device	W/L ratio	Dimension
NM0, NM1	8	4µ / 500n
PM0, PM1	2	1µ / 500n
NM2, NM3	3	1.5µ / 500n
NM4	48	24µ / 500n
PM2	65	26µ / 400n

These dimensions were used consistently throughout the simulations reported below.

4. AC analysis: gain, phase, and GBW:

Simulation setup: V0 = 1.8 V with AC magnitude 1 V, V1 = 1 V, V2 = 1.8 V, C0 = 1 pF, and IBIAS = 15 μA. An AC sweep was performed in ADE L to obtain the gain and phase response.

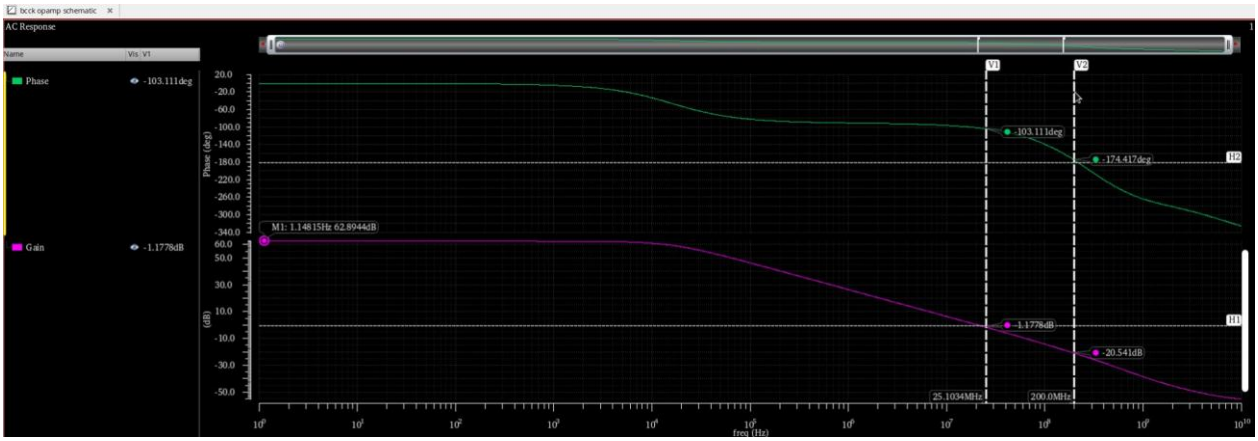

Fig. 3. AC response showing gain, phase, and GBW

- DC gain: 62.89 dB
- Gain-bandwidth product: 25.1 MHz
- Phase margin: 77 deg

5. DC operating point and power:

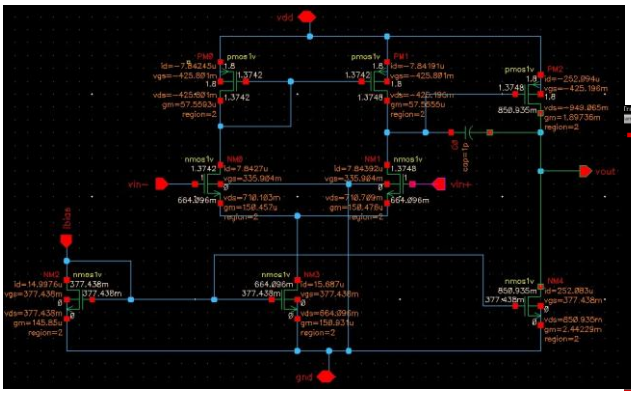

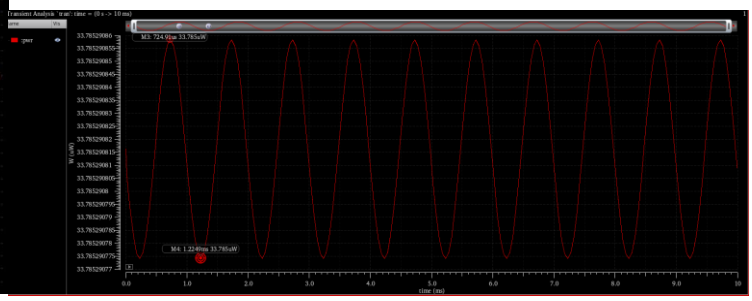

Fig. 4. DC operating point annotated on the schematic

Fig. 5. Power waveform measured in transient analysis

DC analysis indicates that all MOSFETs operate in saturation (region = 2). For power evaluation, the input source was changed to a sinusoidal signal with amplitude 500 μV and frequency 1 kHz, and a transient simulation was run up to 10 ms using conservative settings.

- Measured power around M1: 33.78529085 μW
- Measured power around M2: 33.78529077 μW
- Difference between the two values: 0.00000008 μW

6. Offset, CMRR, PSRR, and slew rate:

These measurements complement the AC analysis by showing input-referred accuracy, immunity to common-mode disturbance, supply rejection behavior, and large-signal response.

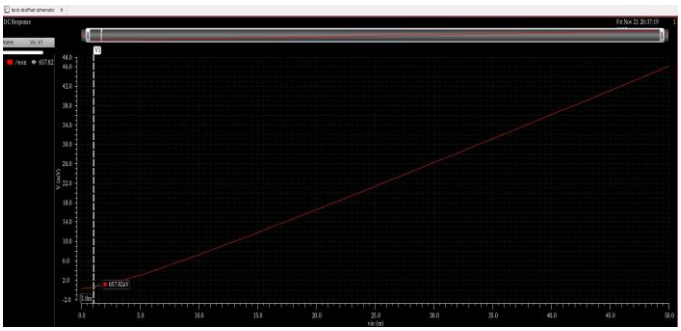

Fig. 6. DC Offset response

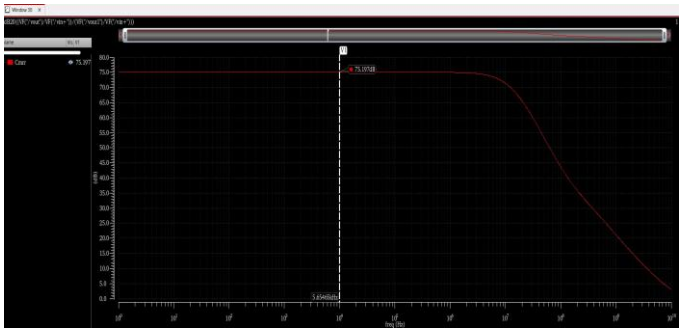

Fig. 7. CMRR response

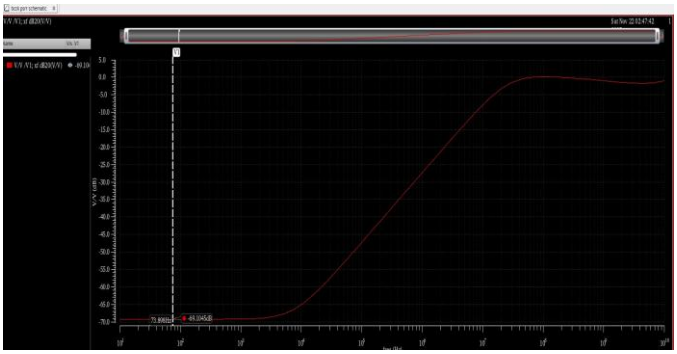

Fig. 8. PSRR response

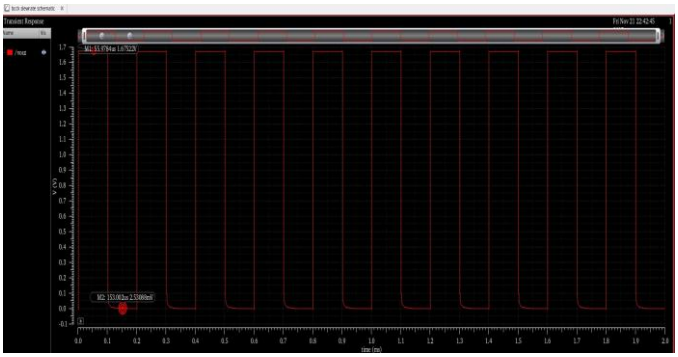

Fig. 9. Slew-rate transient response

- DC Offset: 657.82 µV
- CMRR: 75.197 dB, stable up to approximately 7 MHz before rolling off
- PSRR: 69.1 dB at low frequency, with weaker rejection at higher frequency- Slew rate: 16.27 V/µs

7. Monte Carlo analysis:

Monte Carlo analysis was run in ADE XL with 200 points and process data saved. The following histograms summarize the distribution of selected metrics.

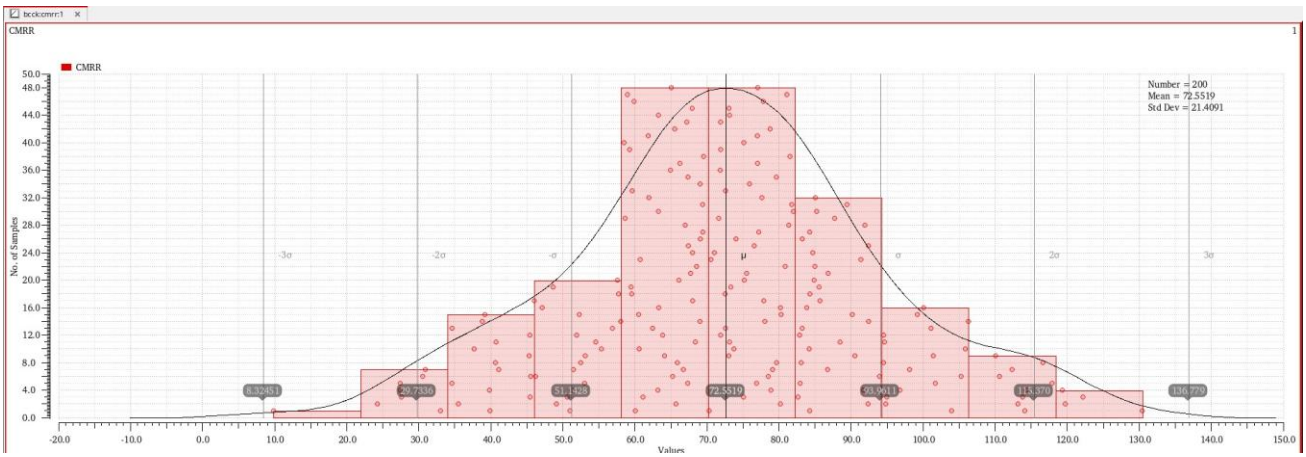

Fig. 10. Monte Carlo histogram of CMRR

- CMRR standard deviation: 29.5%, with a distribution that is not fully symmetric.

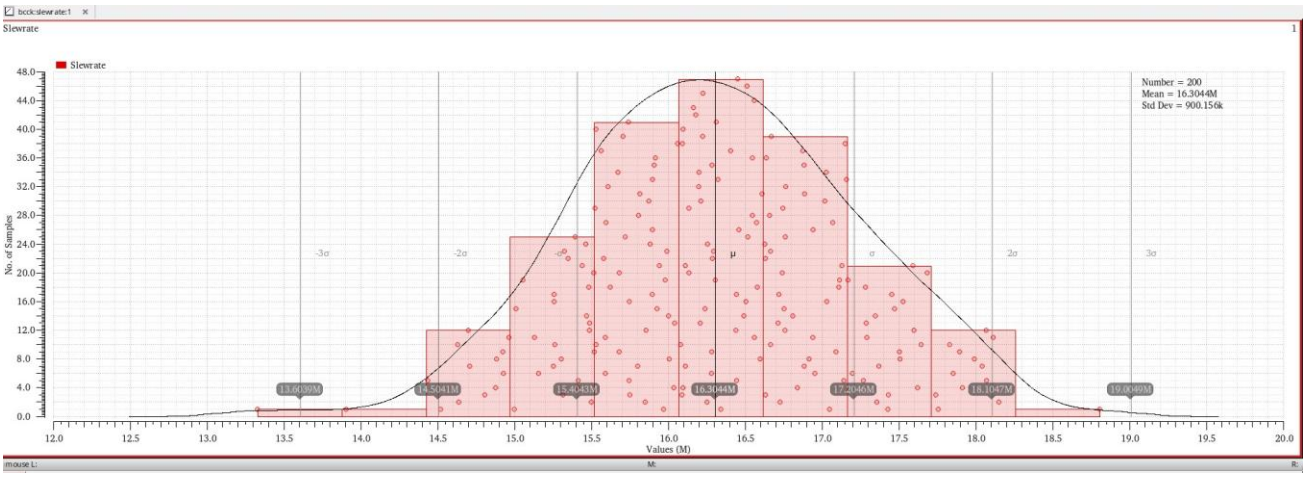

Fig. 11. Monte Carlo histogram of slew rate

- Slew-rate standard deviation: 5.52%, with a relatively symmetric spread.

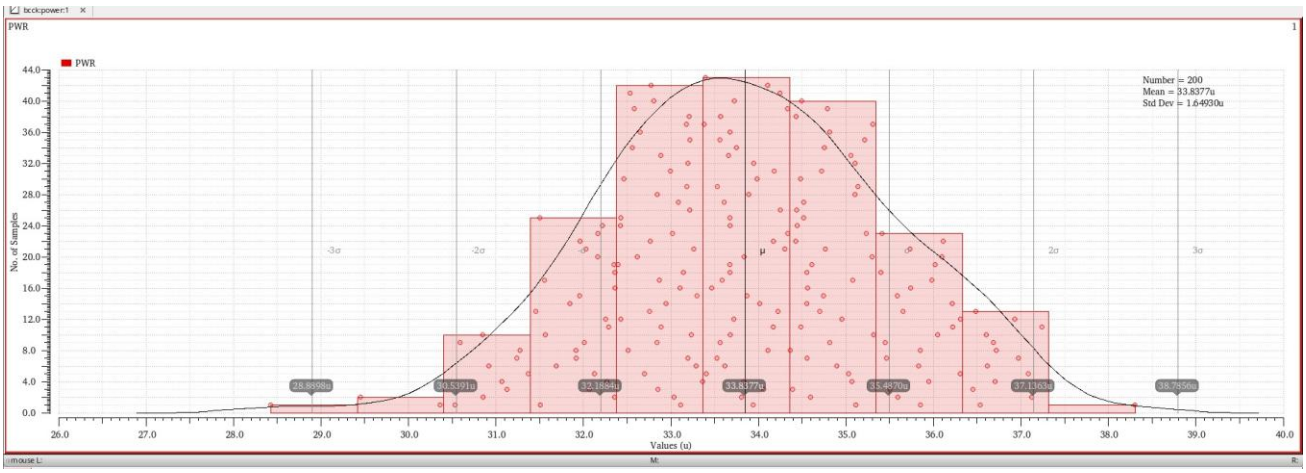

Fig. 12. Monte Carlo histogram of power

- Power standard deviation: 4.87%, with a slightly asymmetric spread.

8. Final results and conclusion:

Metric	Value
Gain	62.89 dB
GBW	25.1 MHz
Phase margin	77 deg
Offset	657.82 µV (0.66 mV)
Power	33.78 µW
CMRR	75.197 dB
PSRR	69.1 dB
Slew rate	16.27 V/µs

Overall, the amplifier meets the intended design goals from the original coursework report. The phase margin is above 45 deg, indicating stable operation, and the gain, GBW, CMRR, PSRR, and slew-rate results are all within a practical range for a two-stage op-amp study.